MT-C-T 3D/3
MT-C-T 3D/3 OC

2288188-04.2020

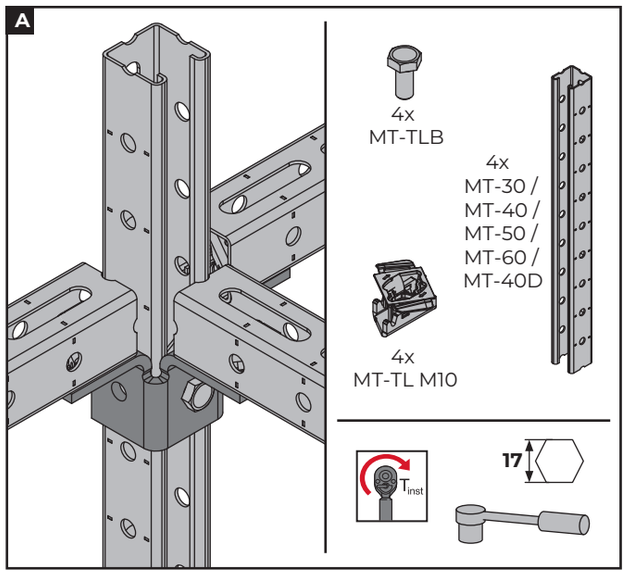

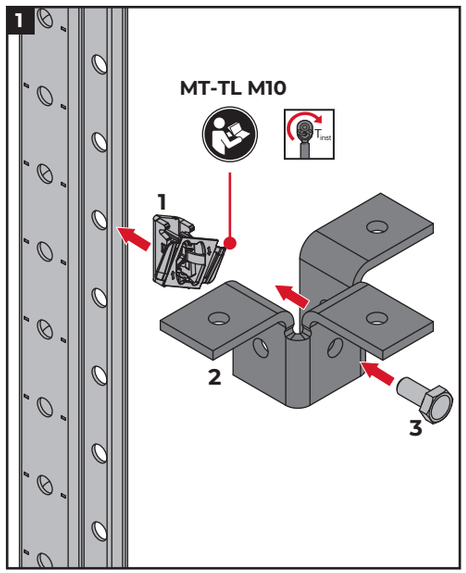

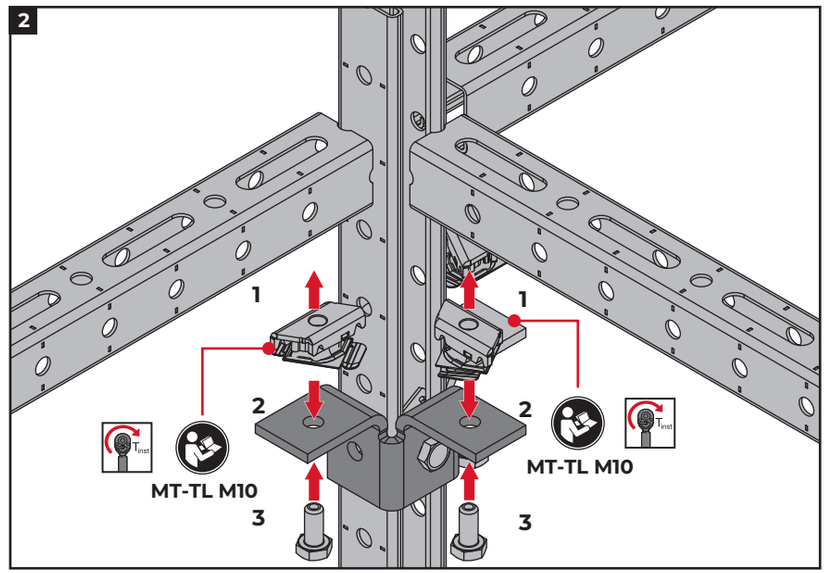

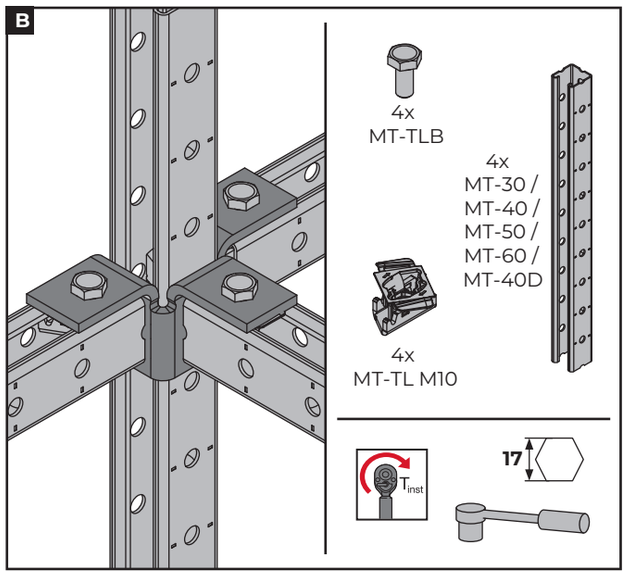

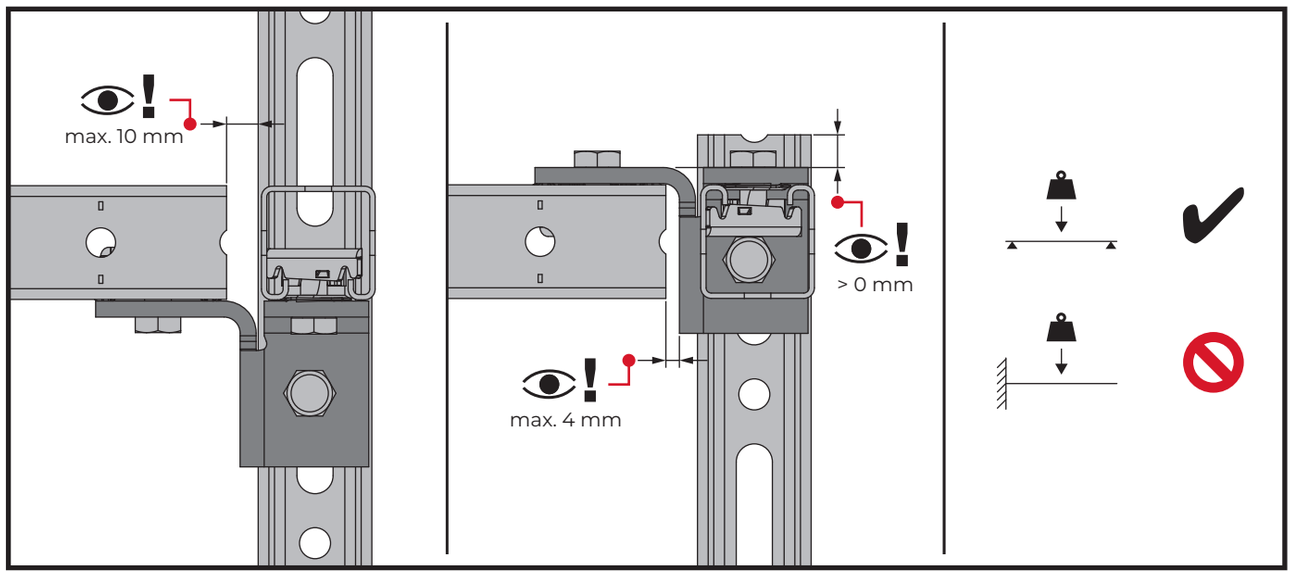

Printed: 22.06.2023 | Doc-Nr: PUB / 5564831 / 000 / 00